Y:\DESIGN\AUTOCAD\PROFILE DWG\2014 PROFILES\42 CC 10' STEEL LEG PROFILE.dwg
Mar 30, 2015 - 2:02pm

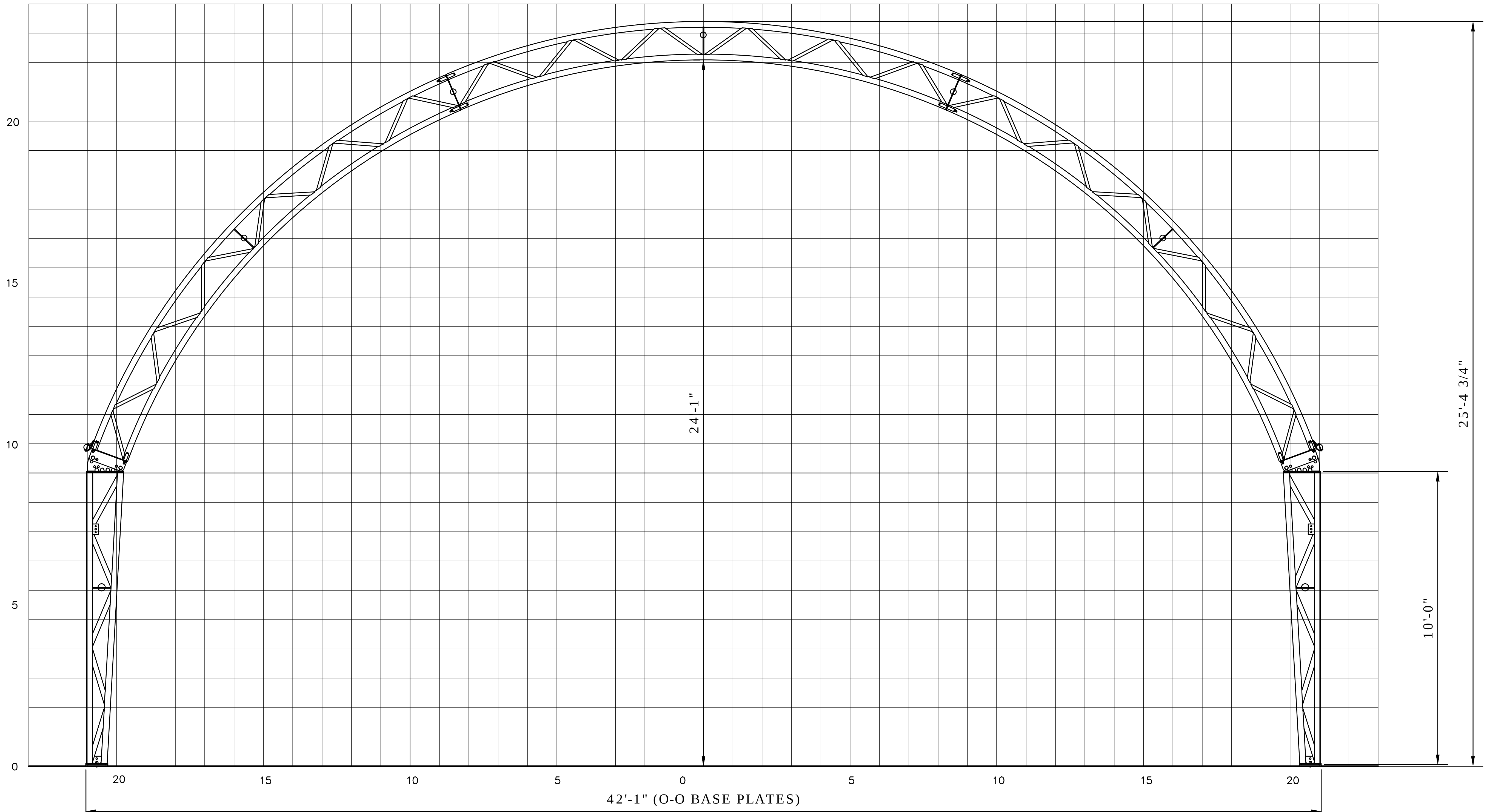

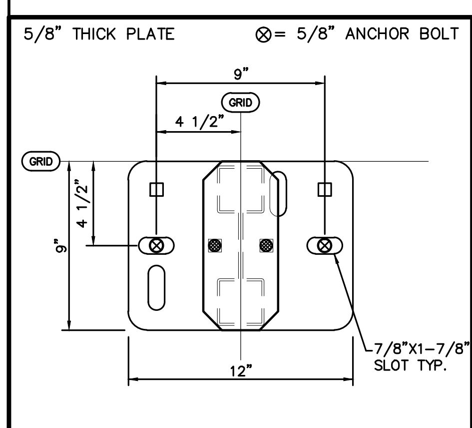

DETAIL A BASE ELEVATION = 100'-0"

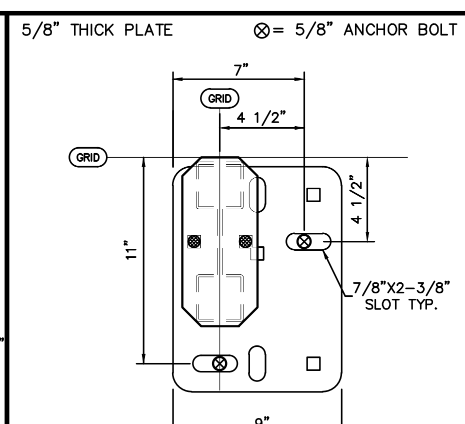

DETAIL B BASE ELEVATION = 100'-0"

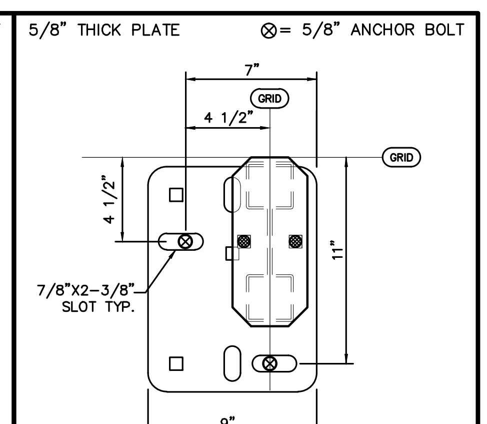

DETAIL C BASE ELEVATION = 100'-0"

No.	DESCRIPTION	DATE
REVISION / ISSUE		

Calhoun Superstructure Ltd.
3702 Bruce Rd #10
Tara, Ontario, Canada
N0H 2N0
800-265-3994
www.calhounsuperstructure.com

	NAME	DATE dd/mm/yyyy
DRAWN	L G G	13/06/2014
CHECKED	R W H	13/06/2014
ENG. APPR.		

PROPRIETARY AND CONFIDENTIAL
THE INFORMATION CONTAINED IN THIS DRAWING IS THE SOLE PROPERTY OF CALHOUN SUPERSTRUCTURE. ANY REPRODUCTION IN PART OR AS A WHOLE WITHOUT THE WRITTEN PERMISSION OF CALHOUN SUPERSTRUCTURE IS PROHIBITED

CALHOUN

42' CC PROFILE
ON 10'-0" STEEL LEG

SIZE: D | DWG. NO.: CC-42
SCALE: N T S | SHEET: 1 OF 1